8-CH Bluetooth Wall Amplifier with Tuya

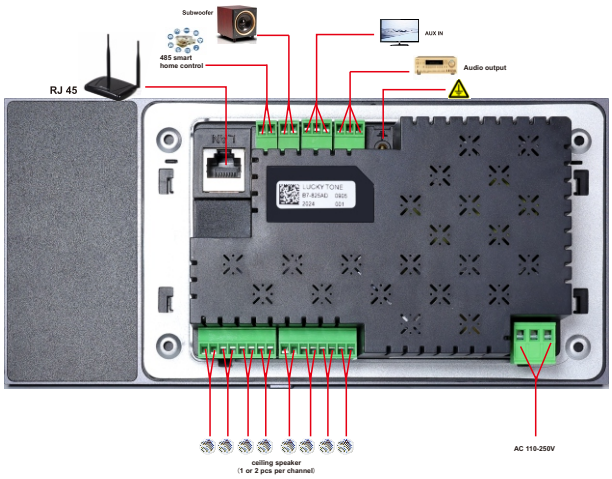

Features:

- ▶ Supports dual-zone music control with a 7-inch touchscreen, 1024x600 resolution, for easy operation and control.
- ▶ Music playback: Supports audio formats such as MP3, WAV, WMA, FLAC, DTS, APE, AC3, OGG, and more.
- ▶ Bluetooth: Allows connection to mobile phones for music playback via Bluetooth.
- ▶ External audio input: Supports external audio sources, which can be amplified and output through the system.
- ▶ Supports wireless microphones and home karaoke (optional feature).
- ▶ Time and calendar: Supports clock and calendar display functions.
- ▶ Storage card functionality: External TF card slot, supporting up to 32GB TF cards.
- ▶ USB functionality: External USB slot, supporting up to 32GB USB drives.
- ▶ Supports both wired network and Wi-Fi connections.
- ▶ Comes with an RS485 interface.
- ▶ Suitable for homes, commercial areas, children's rooms, etc.

SPECIFICATIONS	B7-825AD	B7-825ADT (Tuya version)
Output Power	8*25W	
Speaker Impedance	4-8ohm	
System	Android11	
RAM	2G	
ROM	16G	
Network	WiFi	WiFi, Zigbee
Display	7-inch capacitive touch screen	
Resolution	1024*600 IPS	
Bluetooth Wireless Range	10M	
SNR	98dB	
Frequency Response	20Hz-20Khz	
Music Format	MP3,WAV,WMA,FLAC,APE,,ACC,AC3,OGG	
Video Format	MPEG-1/2/3/4,RM/RMVB,WMV,MOV,MK,VOB,AVI,3GP,H,264	
Power Requirements	AC 110-250V	
Color	Black	
Product Dimension	135*110*75mm	
Net Weight	0.7kg	